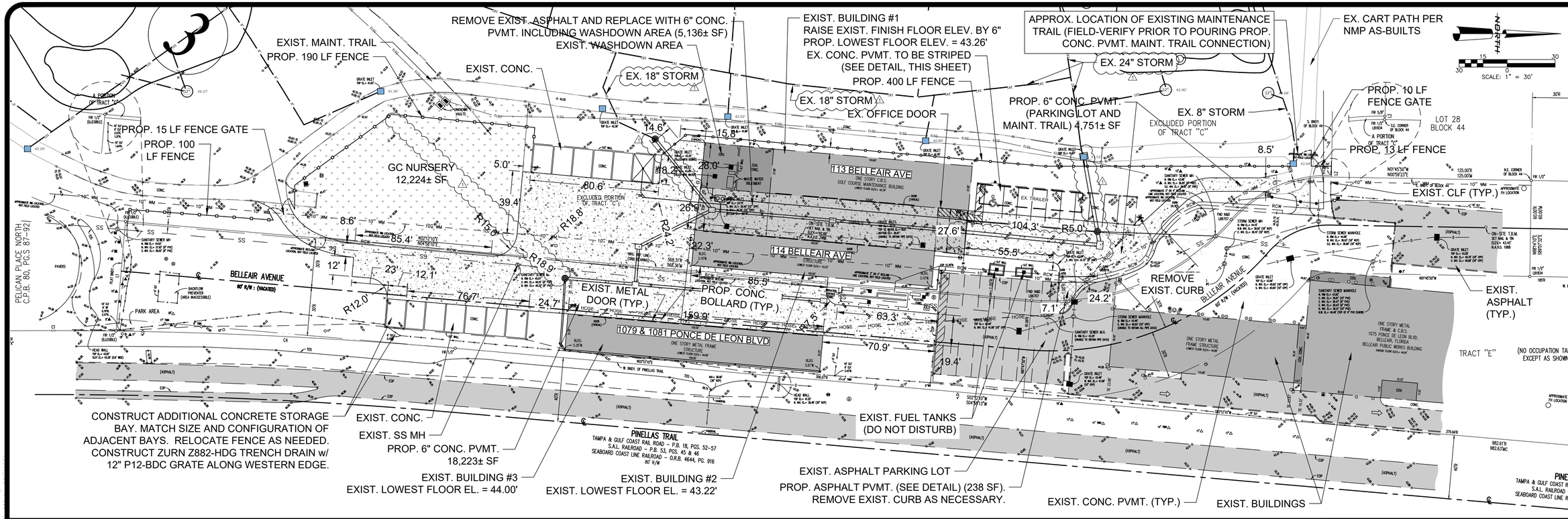

CONCRETE PAVEMENT DETAIL

NTS

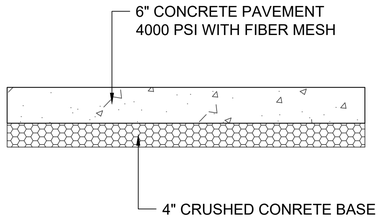

4" BOLLARD DETAIL

NTS

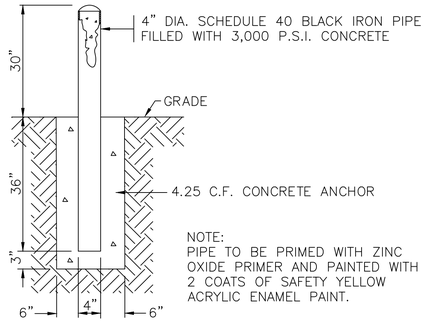

NOTES:

1. PROPOSED FENCE IS TO BE 6' HIGH GREEN PVC FENCING. EXISTING LANDSCAPING IS NOT SHOWN AND MAY CONFLICT WITH PROPOSED FENCE LOCATIONS. COORDINATE WITH OWNER FOR LOCATION OF FENCING AND GATES.
2. CONTRACTOR IS TO PROVIDE CONCRETE CONTRACTION/EXPANSION JOINT PLAN FOR ENGINEER REVIEW.
3. USE 10'X10' CONTRACTION JOINTS. EXPANSION JOINTS TO BE INSTALLED WHERE NEW CONCRETE ABUTS EXISTING CONCRETE AND IN NEW CONCRETE AT A SPACING OF NO MORE THAN 75 LF IN ANY DIRECTION.
4. CONTRACTOR IS TO FIELD-VERIFY LOCATION AND LIMITS OF EXISTING CONCRETE MAINTENANCE TRAIL.
5. EXISTING WASH BAY IS TO BE REDESIGNED. COORDINATE NEW UTILITY CONNECTIONS TO WASH BAY WITH ARCHITECT.
6. SEE BOLLARD PLACEMENT DETAIL FOR TYPICAL LOCATIONS FOR BOLLARDS AS SHOWN ON THIS PLAN. COORDINATE ADDITIONAL BOLLARD LOCATIONS WITH OWNER. PROVIDE BOLLARDS IN ADDITION TO THOSE SHOWN ON PLAN AS REQUESTED BY OWNER.
7. COORDINATE MEP CONNECTIONS TO WASHDOWN AREA WITH ARCHITECT.

PARKING SPACE STRIPING PLAN

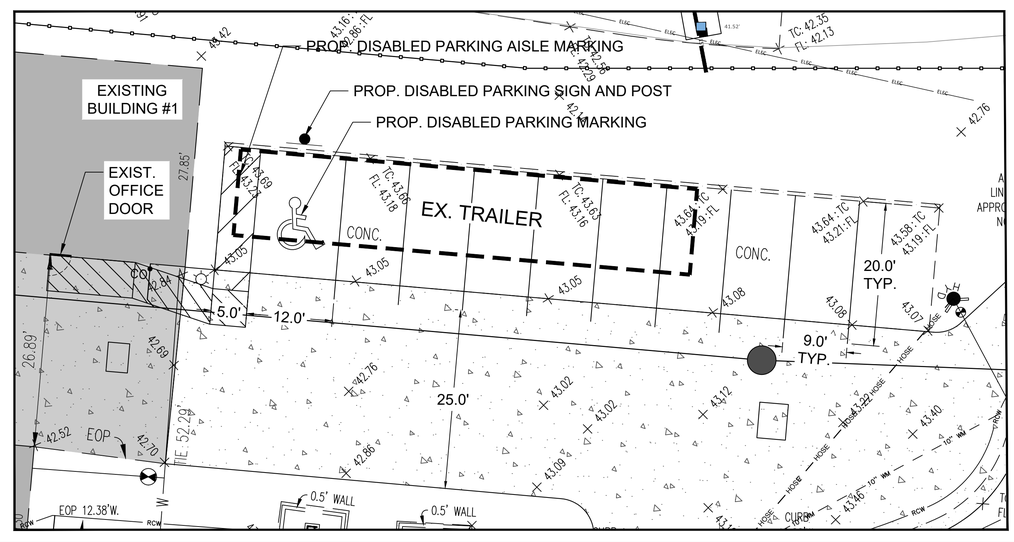

NOTE: THIS PARKING SPACE STRIPING PLAN IS FOR THE EXISTING CONCRETE PAVEMENT TO THE NORTH OF BUILDING #1.

ASPHALT PAVEMENT DETAIL

NTS

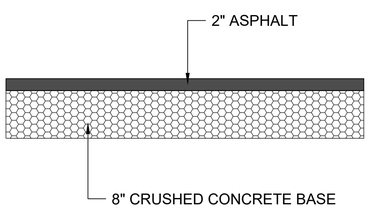

BOLLARD PLACEMENT DETAIL

NTS

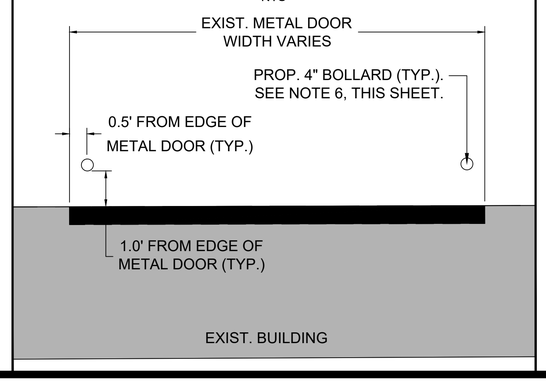

REVISIONS					
NO.	BY	MARK	DATE	DESCRIPTION	
1					
2					
3					
4					
5					

DESIGNED BY:	
DRAWN BY:	MICHAEL KNIGHT
CHECKED BY:	CHRIS WEDDLE
DATE	4-19-2019
JOB NO.	18-174

SITE AND PAVING PLAN

PELICAN GOLF CLUB
MAINTENANCE AREA

HARROD PROPERTIES, INC.
5550 WEST EXECUTIVE DRIVE – SUITE 550
TAMPA, FLORIDA 33609

AURORA CIVIL ENGINEERING INC
610 E. Morgan Street Brandon, FL 33510 (813)643-9807

This item has been electronically signature and sealed by Chris Weddle, P.E. on 04/19/2019 using a SHA-1 authentication code.

Printed copies of this document are not considered signed and sealed and the signature must be verified on any electronic copies.

CHRISTOPHER F. WEDDLE, P.E.
LICENSE No. 56546
CERTIFICATE OF AUTHORIZATION No. 00036809

C-1

File: R:\Projects\Harrod The Pelican\Plans\Maintenance\Maintenance Set; Plotted: 7/12/2019 11:08 AM by MICHAEL KNIGHT, Saved: 7/12/2019 11:06 AM by MICHAEL